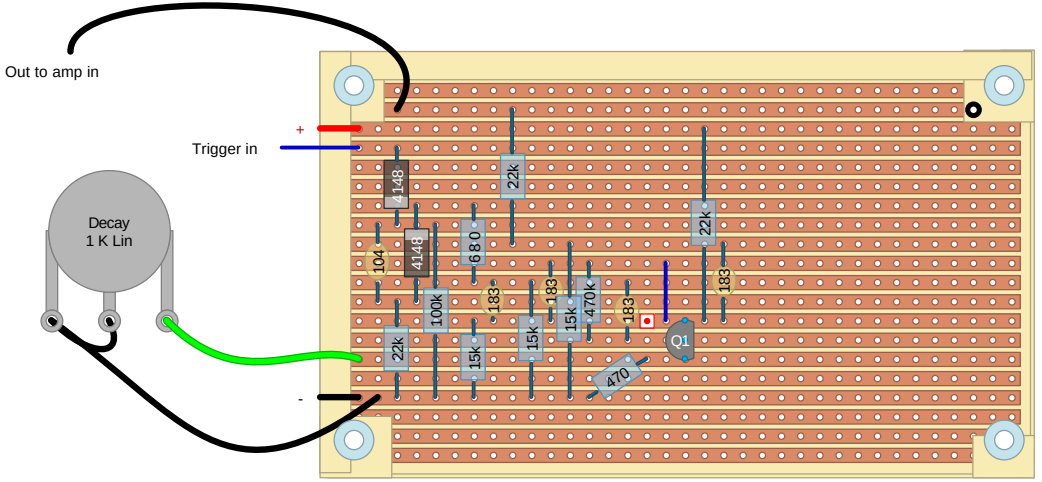
Out to amp in
Trigger in
+
-
Decay
1 K Lin
1N4148
1N4148
104
22k
100k
680
183
15k
15k
183
15k
470k
183
470
Q1
22k
22k
183